WIRING, TSS-B WITH SERVICE LIGHT

SUPPLY VOLTAGE: 460V/3PH/60HZ

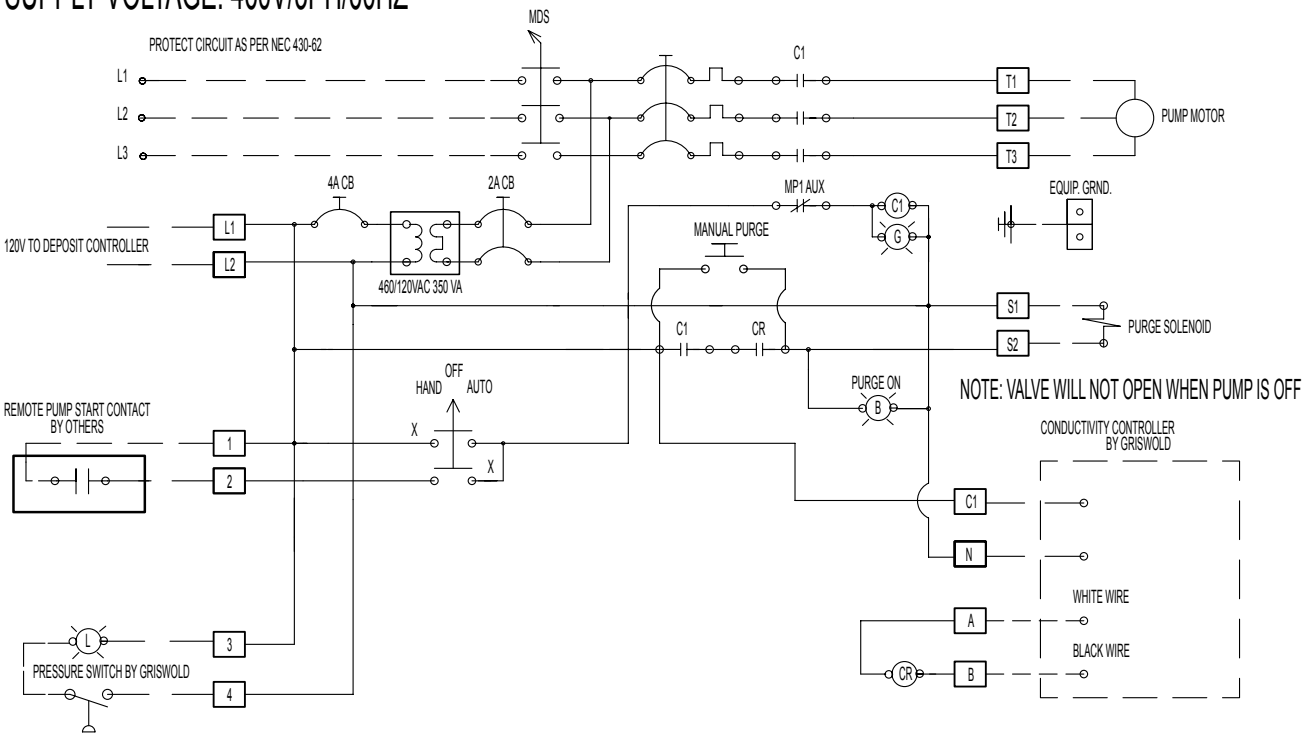

SUPPLY VOLTAGE: 575V/3PH/60HZ

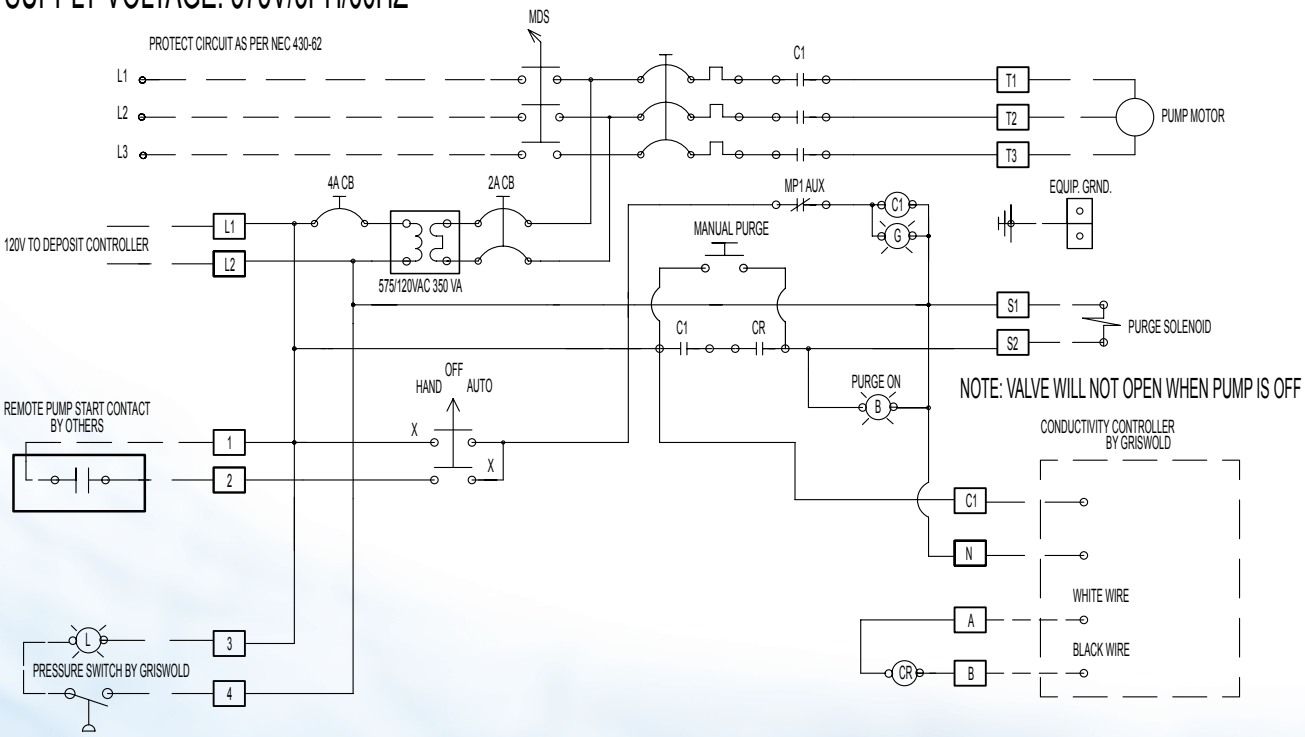

WWW.GRISWOLDWATERSYSTEMS.COM
PROPOSALS & ENGINEERING 1597 INDUSTRIAL DRIVE, NEW SMYRNA BEACH, FL 32168 | T: 386.663.3370 F: 386.663.3371
CUSTOMER SERVICE & MANUFACTURING 1525 EAST 6TH STREET, CORONA, CA 92879 | T: 951.278.8992 F: 951.735.0798